MICHELE BÖNAN
INTERIORS

CONTACT
Limonaia Torrigiani
Via dei serragli 144/146,
50124 Firenze FI
Ph. +39 055 0541106
info@michelebonaninteriors.com

PAGODA

LAMP

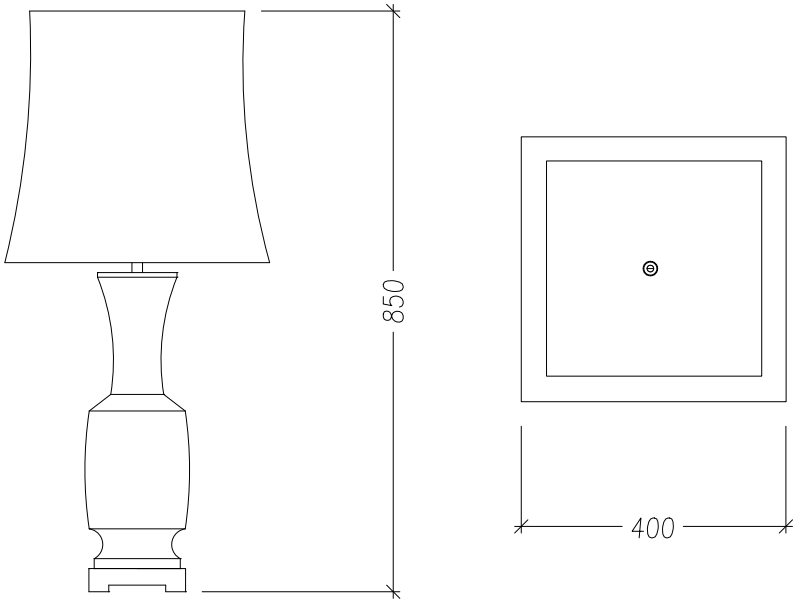

Finishes:
Bronzed brass, red fabric lampshade

Dimensions:
ø: 40 cm / H: 85 cm



