MICHELE BÖNAN
INTERIORS

CONTACT
Limonaia Torrigiani
Via dei serragli 144/146,
50124 Firenze FI
Ph. +39 055 0541106
info@michelebonaninteriors.com

BEVERLY
ARMCHAIR

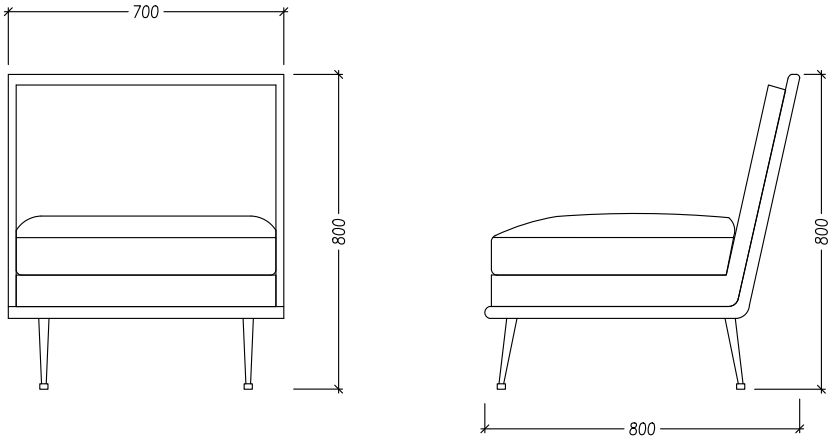

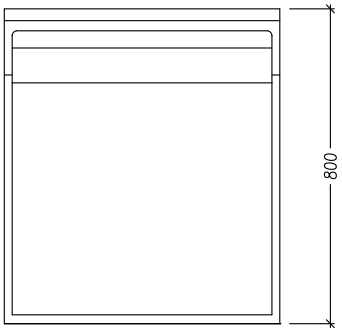

Finishes:
Walnut structure, turquoise velvet upholstery, brass legs

Dimensions:
W: 70 cm / D: 80 cm / H: 80 cm
Seat height: 44 cm





