MICHELE BÖNAN
INTERIORS

CONTACT
Limonaia Torrigiani
Via dei serragli 144/146,
50124 Firenze FI
Ph. +39 055 0541106
info@michelebonaninteriors.com

BEVERLY
BENCH

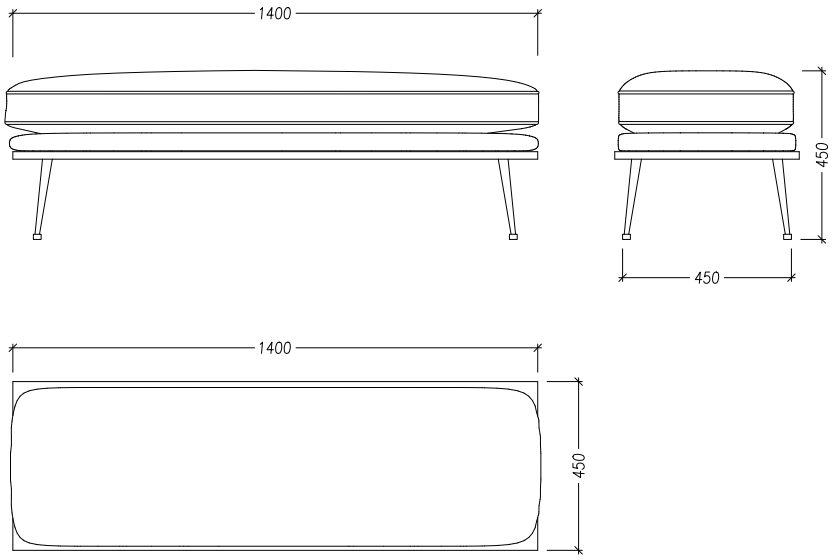

Finishes:
Walnut structure, brass, dove grey velvet upholstery

Dimensions:
W: 140 cm / D: 45 cm / H: 45 cm

